Spare Parts

LKHPF Filtration Centrifugal Pump for High Inlet Pressure

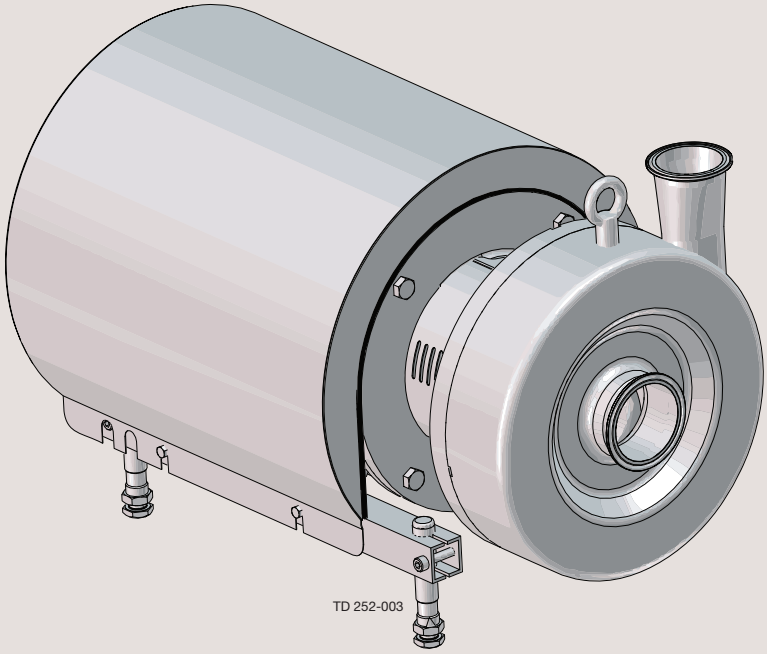

ESE01952-EN15 2019-11

Original manual

Table of contents

The information herein is correct at the time of issue but may be subject to change without prior notice

1. LKHPF - Wet end 4
2. LKHPF - Motor dependent parts 8
3. LKHPF - Shaft seals and service kits 12

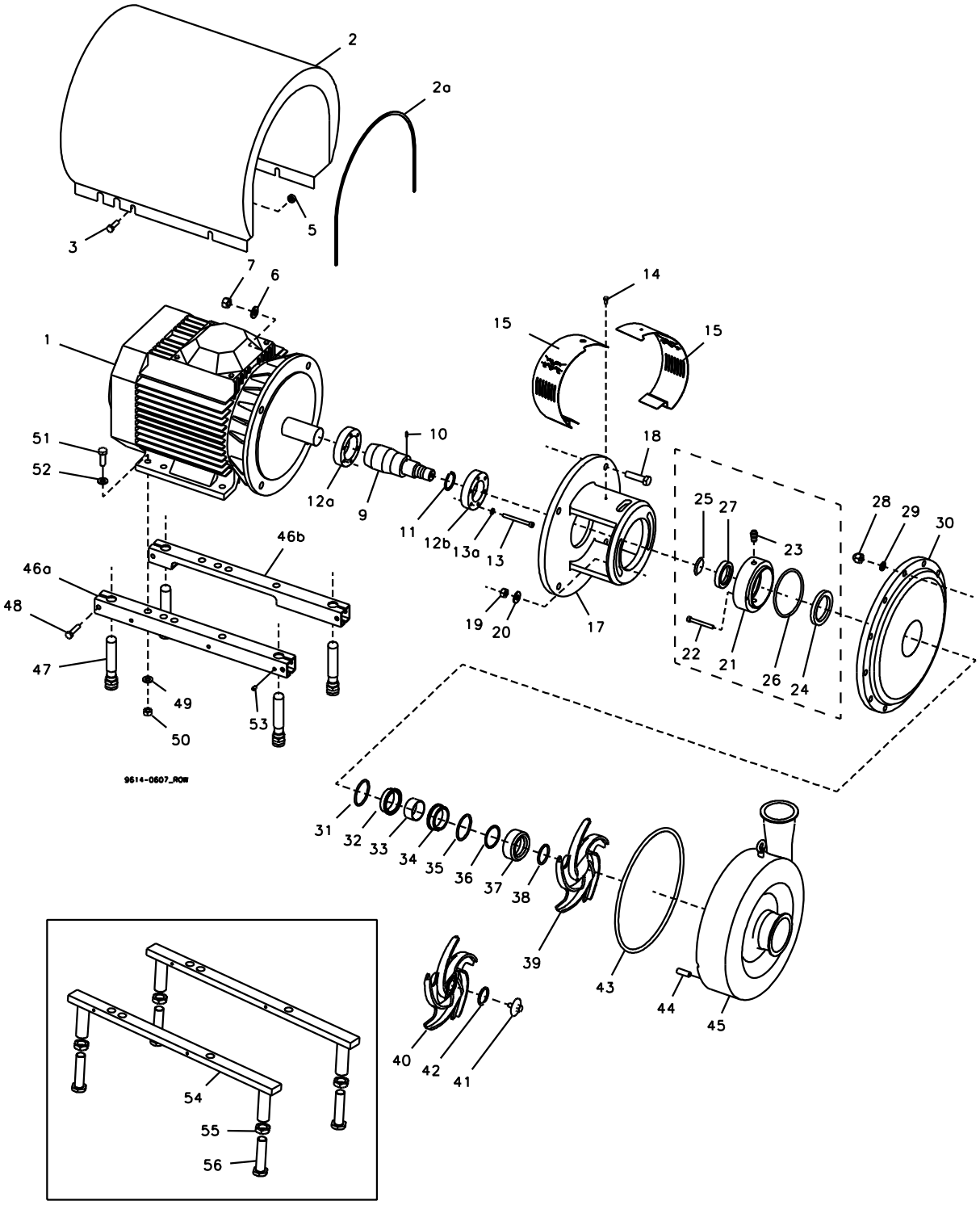
2
2a
3
5
7
6
1
14
15
15
51
52
10
18
12a
9
11
12b
13a
13
25
27
28
29
30
23
46b
46a
48
19
20
17
22
21
26
24
47
49
50
53
9614-0607_ROW
31
32
33
34
35
36
37
38
39
43
44
45
40
42
41
54
55
56

Pos	Qty	Denomination	LKHPF-10 IEC90-IEC112	LKHPF-20 IEC90-IEC132	LKHPF-25 IEC112-IEC160	LKHPF-35 IEC112-IEC160	LKHPF-40 IEC132-IEC180
Pump casing std. blasted							
45	1	Pump casing compl., Flange	9612484030	9612484031	9612511721	9612511722	9612484032
	1	Pump casing compl., Clamp	9612484035	9612484036	9612511724	9612511725	9612484037

Pos	Qty	Denomination	LKHPF-45 IEC112-IEC160	LKHPF-50 IEC132-IEC180	LKHPF-60 IEC132-IEC200	LKHPF-70 IEC180-IEC250
45	1	Pump casing compl., Flange	9612511723	9612484033	9612484034	9612484026
	1	Pump casing compl., Clamp	9612511726	9612484038	9612484039	9612484027

Pos	Qty	Denomination	LKHPF-10 IEC90-IEC112	LKHPF-20 IEC90-IEC132	LKHPF-25 IEC112-IEC160	LKHPF-35 IEC112-IEC160	LKHPF-40 IEC132-IEC180
Pump casing Mech Ra ≤ 0.8							
45	1	Pump casing compl., Flange	9612484040	9612484041	9612511727	9612511728	9612484042
	1	Pump casing compl, Clamp	9612484045	9612484046	9612511730	9612511731	9612484047

Pos	Qty	Denomination	LKHPF-45 IEC112-IEC160	LKHPF-50 IEC132-IEC180	LKHPF-60 IEC132-IEC200	LKHPF-70 IEC180-IEC250
45	1	Pump casing compl., Flange	9612511729	9612484043	9612484044	9612484028
	1	Pump casing compl., Clamp	9612511732	9612484048		9612484029

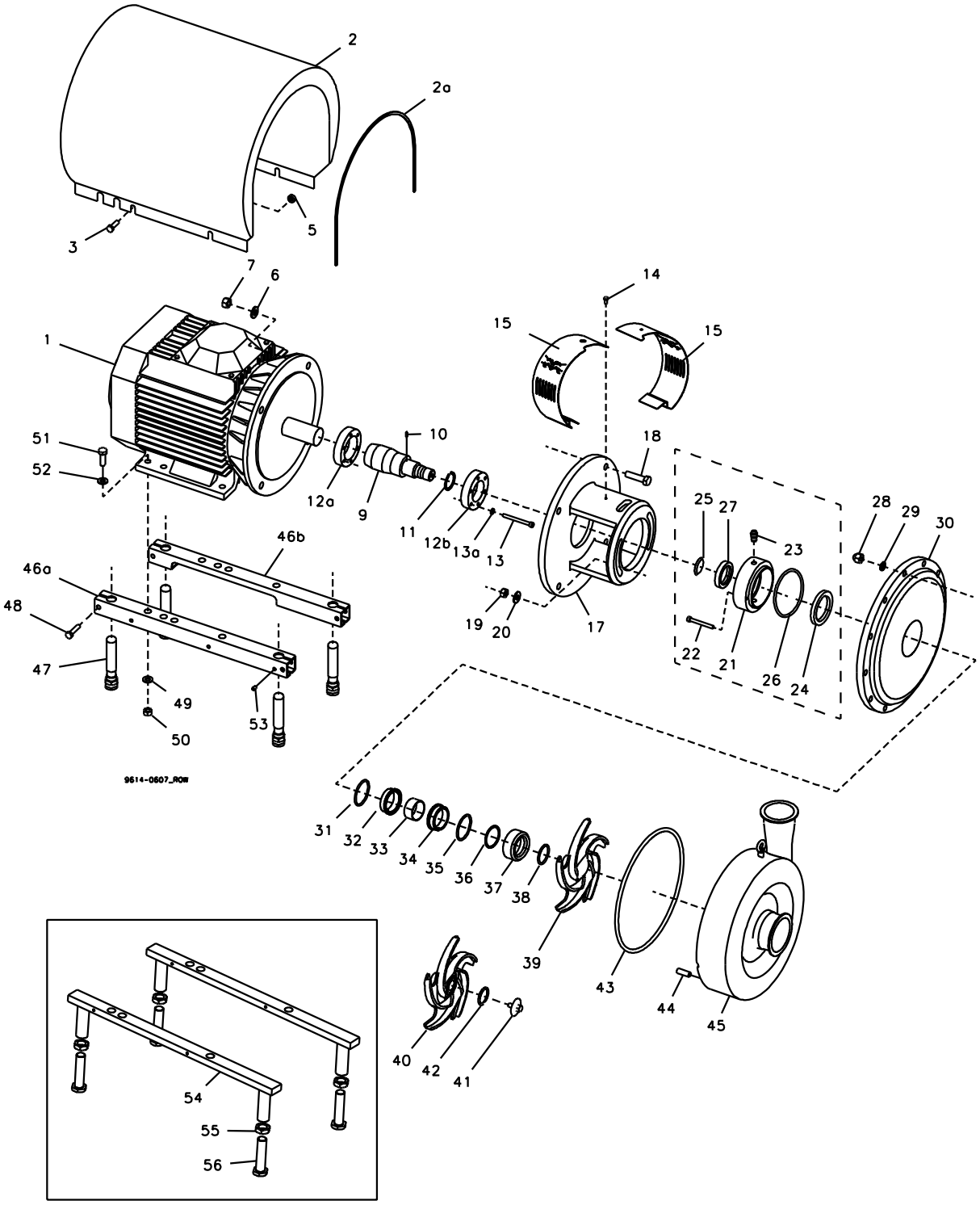
2
2a
3
5
7
6
1
14
15
15
51
52
10
18
12a
9
11
12b
13a
13
25
27
28
29
30
23
46b
46a
48
19
20
17
22
21
26
24
47
49
50
53
9614-0607_ROW
31
32
33
34
35
36
37
38
39
43
44
45
40
42
41
54
55
56

Pos		Qty	Denomination	LKHPF-10 IEC90-IEC112	LKHPF-20 IEC90-IEC132	LKHPF-25 IEC112-IEC160	LKHPF-35 IEC112-IEC160	LKHPF-40 IEC132-IEC180
19		2	Nut	9611990353	9611990353	9611990353	9611990353	9611990353
20		2	Washer	9611992559	9611992559	9611992559	9611992559	9611992559
28		10	Cap nut	9611992593	9611992593	22185115	22185115	
		12	Cap nut					22185115
29		10	Washer	9611991887	9611991887	9611990676	9611990676	
		12	Washer					9611990676
30		1	Back plate, std. blasted	9612483741	9612483738	9612483739	9612483739	9612483740
		1	Back plate, Mech Ra ≤ 0.8	9612483741	9612483742	9612483743	9612483743	9612483744
39		1	Impeller, std. blasted	9612408101	9612408201	9612510301	9612510401	9612408401
		1	Impeller, Mech Ra ≤ 0.8	9612408105	9612408205	9612510305	9612510405	9612408405
40		1	Impeller for impeller screw, std. blasted	9612408102	9612408202	9612510302	9612510402	9612408402
		1	Impeller for impeller, Mech Ra ≤ 0.8	9612408106	9612408206	9612510306	9612510406	9612408406
41		1	Impeller screw, std. blasted	9612139601	9612139601	9612139601	9612139601	9612139601
		1	Impeller screw, Mech Ra ≤ 0.8	9612139603	9612139603	9612139603	9612136903	9612139603
42	♦★	1	O-ring, EPDM (standard)	9611992145	9611992145	9611992145	9611992145	9611992145
		1	O-ring, NBR	9611992147	9611992147	9611992147	9611992147	9611992147
		1	O-ring, FPM	9611992146	9611992146	9611992146	9611992146	9611992146
43	□♦○★	1	O-ring, EPDM (standard)	9611992137	9611992141	9611992983	9611992983	9611992171
		1	O-ring, NBR	9611992139	9611992143	9611992984	9611992984	9611992173
		1	O-ring, FPM	9611992138	9611992142	9611992985	9611992985	9611992172
44		10	Bolt	9611995162	9611995162	9611995085	9611995085	
		12	Bolt					9611995085

Pos		Qty	Denomination	LKHPF-45 IEC112-IEC160	LKHPF-50 IEC132-IEC180	LKHPF-60 IEC132-IEC200	LKHPF-70 IEC180-IEC250
19		2	Nut	9611990353	9611990353	9611990353	
		4	Nut				9611990353
20		2	Washer	9611992559	9611992559	9611992559	
		4	Washer				9611992559
28		10	Cap nut	22185115			
		12	Cap nut		22185115	22185115	
		18	Cap nut				22185115
29		10	Washer	9611990676			
		12	Washer		9611990676	9611990676	
		18	Washer				9611990676
30		1	Back plate, std. blasted	9612483739	9612483740	9612483740	9612483719
		1	Back plate, Mech Ra ≤ 0.8	9612483743	9612483744	9612483744	9612483720
39		1	Impeller, std. blasted	9612510501	9612408501	9612408601	
		1	Impeller, Mech Ra ≤ 0.8	9612510505	9612408505	9612408605	
40		1	Impeller for impeller screw, std. blasted	9612510502	9612408502	9612408602	9613425501
		1	Impeller for impeller, Mech Ra ≤ 0.8	9612510506	9612408506	9612408606	9613425503
41		1	Impeller screw, std. blasted	9612139601	9612139601	9612139601	9612927101
		1	Impeller screw, Mech Ra ≤ 0.8	9612136903	9612139603	9612139603	9612927102
42	□♦○★	1	O-ring, EPDM (standard)	9611992145	9611992145	9611992145	9611993215
		1	O-ring, NBR	9611992147	9611992147	9611992147	9611993216
		1	O-ring, FPM	9611992146	9611992146	9611992146	9611993217
43	□♦○★	1	O-ring, EPDM (standard)	9611992983	9611992171	9611992171	9611993211
		1	O-ring, NBR	9611992984	9611992173	9611992173	9611993212
		1	O-ring, FPM	9611992985	9611992172	9611992172	9611993213
44		10	Bolt	9611995085			
		12	Bolt		9611995085	9611995085	
		18	Bolt				9611995085

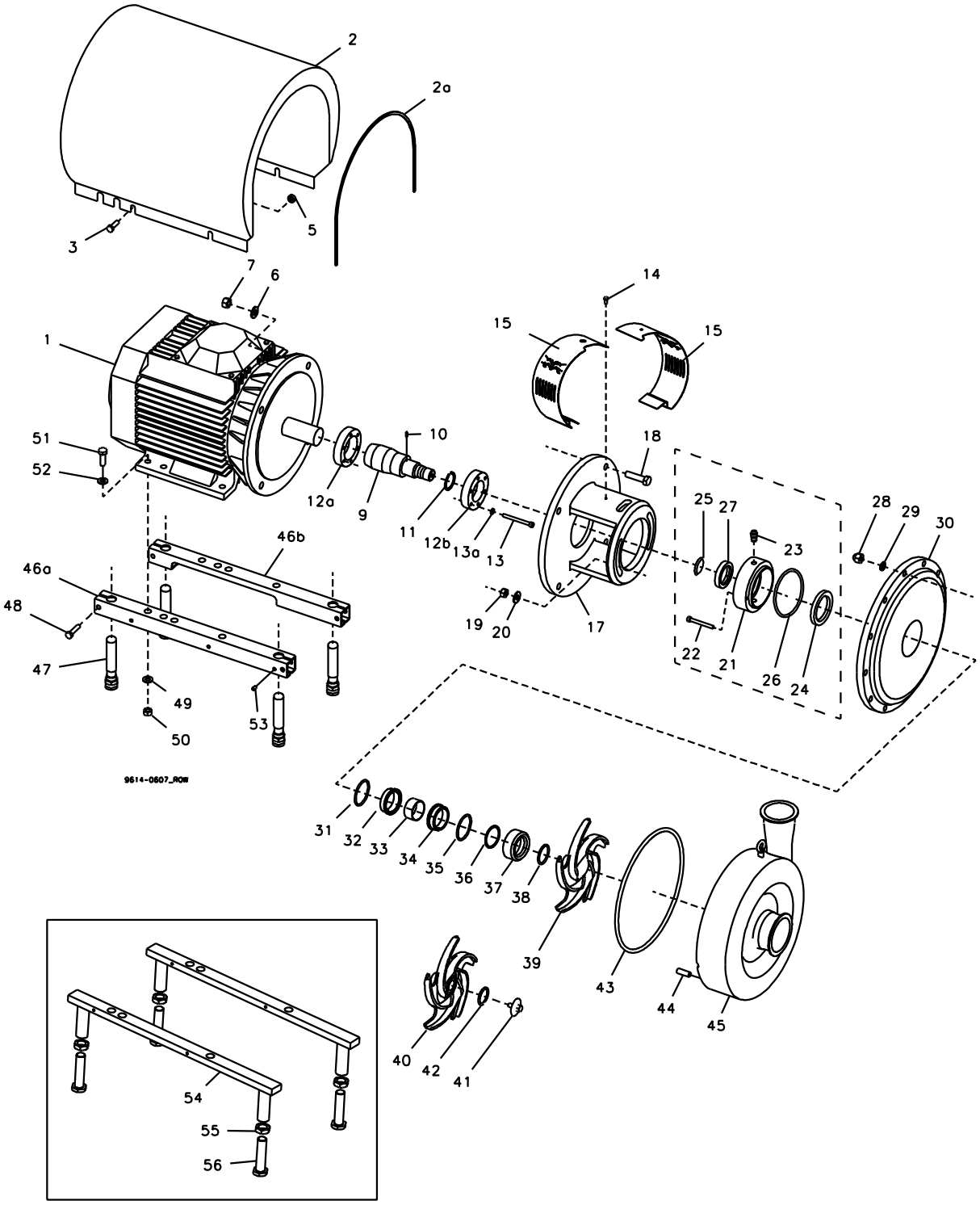
2
2a
3
5
7
6
1
14
15
15
51
52
10
18
12a
9
11
12b
13a
13
25
27
28
29
30
23
46b
46a
48
19
20
17
22
21
26
24
47
49
50
53
9614-0607_ROW
31
32
33
34
35
36
37
38
39
43
44
45
40
42
41
54
55
56

Pos	Qty	Denomination	LKHPF 10-60 IEC90	LKHPF 10-60 IEC112	LKHPF 10-60 IEC132	LKHPF 10-60 IEC160	LKHPF 10-60 IEC180	LKHPF 10-60 IEC200
2	1	Shroud	9612139001	9614192203	9612139008	9612139005	9612139006	9612593801
3	4	Screw	9611993240	9611993240	9611993240	9611993241	9611993243	9611993243
5	4	Distance sleeve			9611992737	3143803902	3143803901	3143803903
6	4	Washer for adaptor	9611991887	9611990676	9611990676	9611991886	9611991886	9611991886
7	4	Nut for adaptor	9611990353	9611990587	9611990587	9611992160	9611992160	9611992160
9	1	Shaft incl. pin, (pos.10)		9612132502	9612132602	9612132702	9612132802	9612232902
	1	Shaft incl. pin and retaining ring, (pos.10+11)	9612132402					
10	1	Connex pin	9611990622	9611990622	9611990622	9611990622	9611990622	9611990622
11	1	Retaining ring	9611992307					
12a	1	Compression ring with thread	9612133601	9612133602	9612133605	9612133603	9612133604	9612133607
12b	1	Compression ring without thread	9612133701	9612133702	9612133705	9612133703	9612133704	9612133707
13	6	Screw	9611993196	9611993196	9611993197	9611993198	9611993198	9611993198
13a	6	Washer	9611993199	9611993199	9611993199	9611993199	9611993199	9611993199
14	1	Screw for safety guard	9611993239	9611993239	9611993239	9611993239	9611993239	9611993239
15	1	Safety guard set	9614077401	9614077402	9614077403	9614077404	9614077404	9614077405
17	1	Adaptor	9612342301	9612342401	9612342501	9612342601	9612342601	9612342701
18	4	Screw for adaptor	9611992161	9611991834	9611992162	9611992163	9611992164	9611992164
46a	1	Support bar, right	9612132201	9612132205	9612132206	9612132203	9612132204	9612342201
46b	1	Support bar, left	9612132301	9612132305	9612132306	9612132303	9612132304	9612342201
47	4	Leg	9612396701	9612396701	9612396701	9612396701	9612396701	9612396701
48	4	Screw	9611991126	9611991126	9611991126	9611991126	9611991126	9611991907
49	4	Spring washer	9611991888	9611991887	9611991887	9611990676	9611990676	9611991886
50	4	Nut	9611990360	9611990353	9611990353	9611990587	9611990587	9611992160
51	4	Screw	9611993241	9611991911	9611991911	9611991834	9611991834	9611993680
52	4	Washer		9611990786	9611990786	9611990706	9611990706	9611990703
53	4	Pivot screw						9611991763

Pos	Qty	Denomination	LKHPF 70 IEC180	LKHPF 70 IEC200	LKHPF 70 IEC250
2	1	Shroud	9612139006	9612593801	9612593804
3	4	Screw	9611993243	9611993243	9611993242
5	4	Distance sleeve	3143803901	3143803903	3143803901
6	4	Washer for adaptor	9611991886	9611991886	9611991886
7	4	Nut for adaptor	9611992160	9611992160	9611992160
9	1	Shaft incl. pin, (pos.10)	9612512303	9612512203	9612501003
12a	1	Compression ring with thread	9612133604	9612133607	9612133608
12b	1	Compression ring without thread	9612133704	9612133707	9612133708
13	6	Screw	9611993198	9611993198	9611993266
13a	6	Washer	9611993199	9611993199	9611993199
14	1	Screw for safety guard	9611993239	9611993239	9611993239
15	1	Safety guard set	9614077407	9614077407	9614077408
17	1	Adaptor	9612511901	9612511801	9612500801
18	4	Screw for adaptor	9611992164	9611992164	9611992200
46a	1	Support bar, right	9612132204	9612342201	
46b	1	Support bar, left	9612132304	9612342201	
47	4	Leg	9612396701	9612396701	
48	4	Screw	9611991126	9611991907	
49	4	Spring washer	9611990587	9611990587	9611990935
50	4	Nut	9611990676	9611990676	9611993267
51	4	Screw	9611991834	9611993680	9611993268
52	4	Washer	9611990706	9611990703	9611993269
53	4	Pivot screw		9611991763	
54	2	Leg bracket			9612518401
55	4	Nut for leg			9611993260
56	4	Screw for leg			9612518501

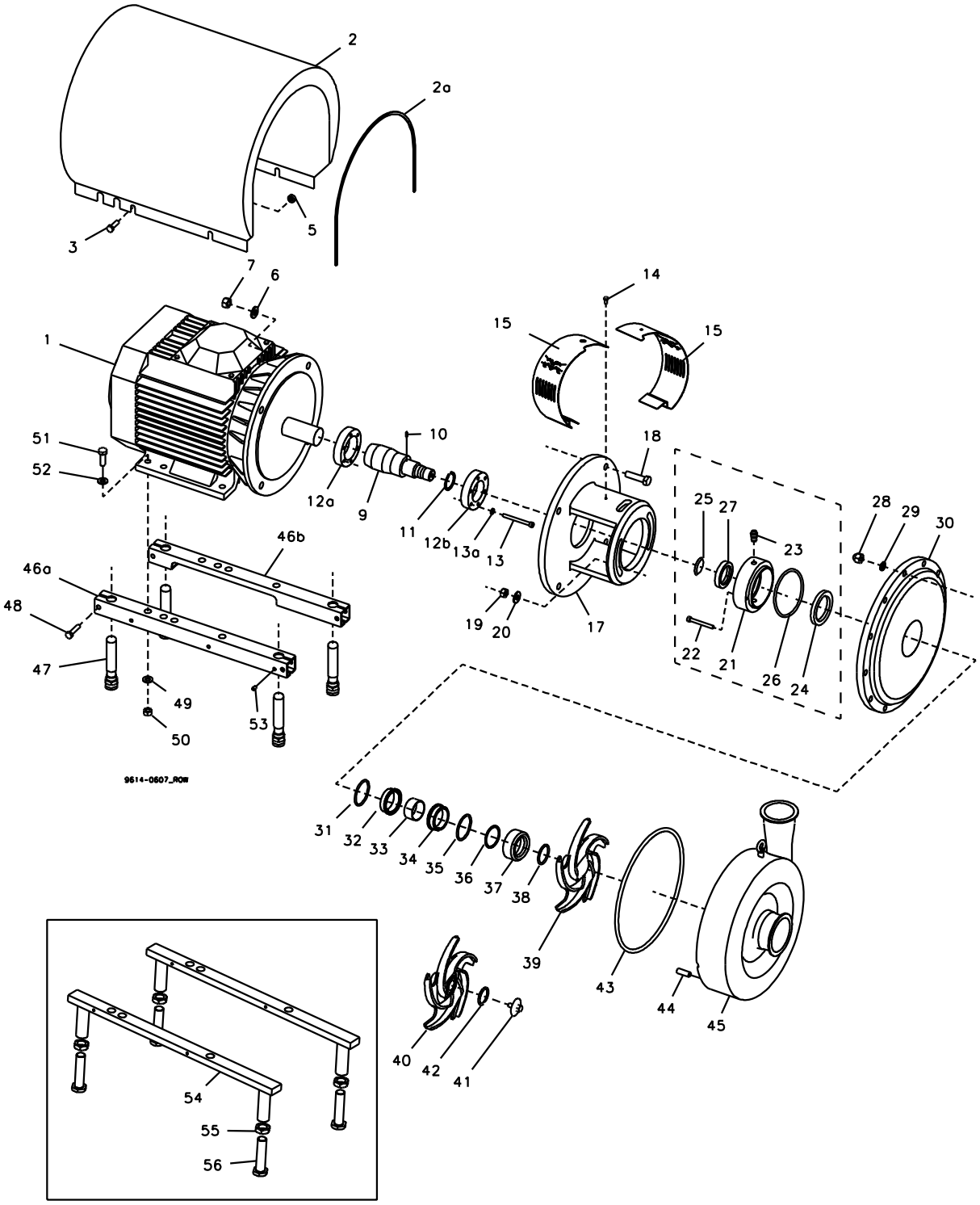
2
2a
3
5
7
6
1
14
15
15
51
52
10
18
12a
9
11
12b
13a
13
25
27
28
29
30
23
46b
46a
48
19
20
17
22
21
26
24
47
49
50
53
9614-0607_ROW
31
32
33
34
35
36
37
38
39
43
44
45
40
42
41
54
55
56

Pos	Qty	Denomination	2.2 kW IEC90	4 kW IEC100	5.5 kW IEC112	7.5 kW IEC132	11 kW IEC160
1	1	Motor ABB, 3000rpm special bearing	9614289501	9614289502	9614289503	9614289504	9614289505

Pos	Qty	Denomination	15 kW IEC160	18.5 kW IEC160	22 kW IEC180	30 kW IEC200	37 kW IEC200
1	1	Motor ABB, 3000rpm special bearing	9614289506	9614289507	9614289509	9614289510	9614289511

Pos	Qty	Denomination	45 kW IEC200	55 kW IEC250	75 kW IEC250
1	1	Motor ABB, 3000rpm special bearing	9614289512	9614289513	9614289514

3 ~, 50 Hz, 230VD/400-415VY - Standard ≤ 22 kW and 400-415VD/690VY Standard > 22 kW
3 ~, 60 Hz, 440-460VY - Standard ≤ 22 kW and 440-460VD Standard > 22 kW

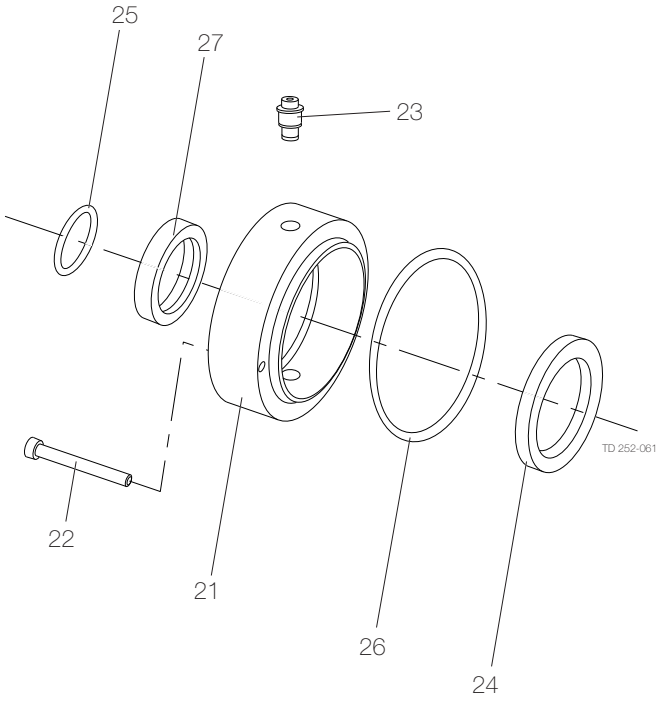
25
27
23
22
21
26
24
TD 252-061

Pos	Qty	Denomination	LKHPF 10-60	LKHPF 70
33	1	Spacing ring	9612362502	9612362504
37	1	Rotating seal housing	9612362401	9612604501
57	1	Set of 8 springs for rotating sealhousing, (incl. In pos 37)	9611995848	
	1	Set of 14 springs for rotating sealhousing, (incl. In pos 37)		9611995849

Parts for flushed shaft seal

21	1	Seal housing for flushed seal	9612362602	9612362604
22	2	Screw	9611994038	9611993232
23	2	Fittings	9611992323	9611992323
27	1	Sleeve	9612362902	9612362903

Pos	Qty	Denomination	LKHPF 10-60 EPDM	LKHPF 10-60 NBR	LKHPF 10-60 FPM	LKHPF 70 EPDM	LKHPF 70 NBR	LKHPF 70 FPM
Single shaft seal								
□♦		Shaft seal complete	9612362204	9612362205	9612362206	9612602404	9612602405	9612602406
31	1	O-ring						
32	1	Stationary seal ring, SiC						
34	1	Rotating seal ring, SiC.						
35	1	Quad ring/O-ring						
36	1	PTFE support ring						
38	1	Quad ring/O-ring						
Flushed shaft seal								
○★		Shaft seal complete	9612362210	9612362211	9612362212	9612602410	9612602411	9612602412
24	1	Lip seal						
25	1	O-ring, EPDM						
26	1	O-ring, EPDM						
31	1	O-ring						
32	1	Stationary seal ring, SiC						
34	1	Rotating seal ring, SiC						
35	1	Quad ring						
36	1	PTFE support ring						
38	1	Quad ring						

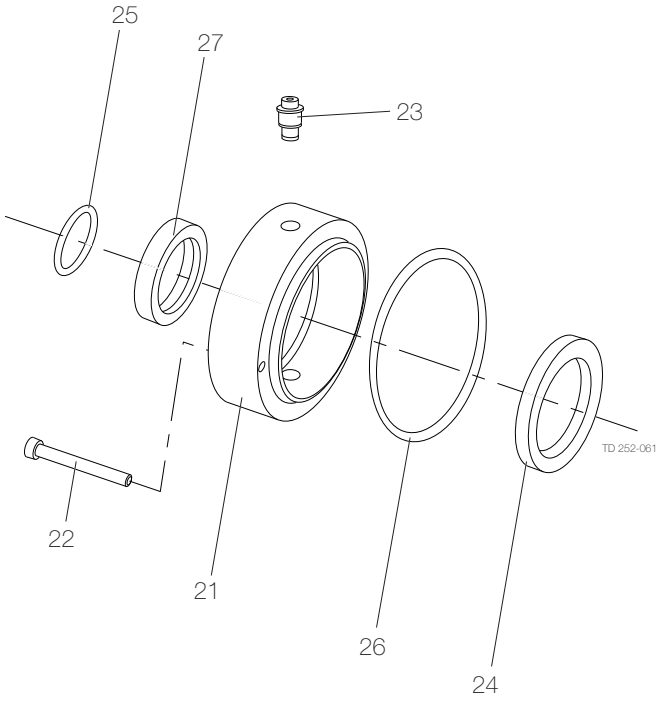
25
27
23
22
21
26
24
TD 252-061

		EPDM	NBR	FPM
Service kit for single shaft seal SiC/SiC				
□	Service kit, SiC/SiC (LKHPF -10)	9611922139	9611922140	9611922141
□	Service kit, SiC/SiC (LKHPF -20)	9611922151		9611922153
□	Service kit, SiC/SiC (LKHPF -25/35/45)	9611922194		9611922196
□	Service kit, SiC/SiC (LKHPF -40/50/60)	9611922163	9611922164	9611922165
Service kit for single shaft seal and impeller screw SiC/SiC				
♦	Service kit, SiC/SiC (LKHPF -10)	9611922142	9611922143	9611922144
♦	Service kit, SiC/SiC (LKHPF -20)	9611922154	9611922155	9611922156
♦	Service kit, SiC/SiC (LKHPF -25/35/45)	9611922197	9611922198	9611922199
♦	Service kit, SiC/SiC (LKHPF -40/50/60)	9611922166	9611922167	9611922168
♦	Service kit, SiC/SiC (LKHPF -70)	9611922946	9611922947	9611922948
Service kit for flushed shaft seal SiC/SiC				
○	Service kit, SiC/SiC (LKHPF -10)	9611922145		9611922147
○	Service kit, SiC/SiC (LKHPF -20)	9611922157		
○	Service kit, SiC/SiC (LKHPF -25/35/45)	9611922200		9611922202
○	Service kit, SiC/SiC (LKHPF -40/50/60)	9611922169	9611922170	9611922171
Service kit for flushed shaft seal and impeller screw SiC/SiC				
★	Service kit, SiC/SiC (LKHPF -10)	9611922148		
★	Service kit, SiC/SiC (LKHPF -20)	9611922160		9611922162
★	Service kit, SiC/SiC (LKHPF -25/35/45)	9611922203	9611922204	9611922205
★	Service kit, SiC/SiC (LKHPF -40/50/60)	9611922172	9611922173	
★	Service kit, SiC/SiC (LKHPF -70)	9611922949	9611922950	9611922951

Parts marked with □♦○★ are included in the service kits. Recommended spare parts: Service kits.
Conversion single to flushed shaft seal : Please order Flushed service kit + pos. 21+22+23+27
(900599/11)

How to contact Alfa Laval
Contact details for all countries are
continually updated on our website.
Please visit www.alfalaval.com to access the information directly.

© Alfa Laval Corporate AB
This document and its contents is owned by Alfa Laval Corporate AB and protected by laws governing intellectual property and thereto related rights. It is the responsibility of the user of this document to comply with all applicable intellectual property laws. Without limiting any rights related to this document, no part of this document may be copied, reproduced or transmitted in any form or by any means (electronic, mechanical, photocopying, recording, or otherwise), or for any purpose, without the expressed permission of Alfa Laval Corporate AB. Alfa Laval Corporate AB will enforce its rights related to this document to the fullest extent of the law, including the seeking of criminal prosecution.