EN

Instruction Manual - Fusion-bonded plate heat exchangers

AlfaNova 76-400

34566978-01-EN 2018-01

Original manual

www.alfalaval.com/fhe-manuals

English

Download local language versions of this instruction manual from www.alfalaval.com/fhe-manuals or use the QR code

български

Изтеглете версиите на това ръководство за употреба на местния език от www.alfalaval.com/fhe-manuals или използвайте QR кода.

Český

Stáhněte si místní jazykovou verzi tohoto návodu k obsluze z www.alfalaval.com/fhe-manuals nebo použijte QR kód.

Dansk

Hent lokale sprogversioner af denne brugervejledning på www.alfalaval.com/fhe-manuals eller brug QR-koden.

Deutsch

Sie können die landessprachlichen Versionen dieses Handbuch von der Website www.alfalaval.com/fhe-manuals oder über den QR-Code herunterladen.

ελληνικά

Πραγματοποιήστε λήψη εκδόσεων του παρόντος εγχειριδίου οδηγιών σε τοπική γλώσσα από το www.alfalaval.com/fhe-manuals ή χρησιμοποιήστε τον κωδικό QR.

Español

Descárguese la versión de este Manual de instrucciones en su idioma local desde www.alfalaval.com/fhe-manualso utilice el código QR.

Eesti

Selle kasutusjuhendi kohaliku keele versiooni saate alla laadida lingilt www.alfalaval.com/fhe-manuals või kasutades QR-koodi.

Suomalainen

Laitaa tämän käyttöohjeen suomenkielinen versio osoitteesta www.alfalaval.com/fhe-manuals tai QR-koodilla.

Français

Téléchargez des versions de ce manuel d’instructions en différentes langues sur www.alfalaval.com/fhe-manuals ou utilisez le code QR.

Hrvatski

Preuzmite lokalne verzije jezika ovog korisničkog priručnika na poveznici www.alfalaval.com/fhe-manuals ili upotrijebite QR kod.

Magyar

Az Ön nyelvére lefordított használati útmutatót letöltheti a www.alfalaval.com/fhe-manuals weboldalról, vagy használja a QR-kódot.

Italiano

Scarica la versione in lingua locale del manuale di istruzioni da www.alfalaval.com/fhe-manuals oppure utilizza il codice QR.

日本の

www.alfalaval.com/fhe-manuals からご自分の言語の取扱説明書をダウンロードするか、QRコードをお使いください。

한국의

www.alfalaval.com/fhe-manuals 에서 이 사용 설명서의 해당 언어 버전을 다운로드하거나 QR 코드를 사용하십시오.

Latvijas

Atsisiųskite šios instrukcijos versijas vietos kalba iš www.alfalaval.com/fhe-manuals arba pasinaudokite QR kodu.

Lietuvos

Lejupielādējiet šīs rokasgrāmatas lokālo valodu versijas no vietnes www.alfalaval.com/fhe-manuals vai izmantojiet QR kodu.

Nederlands

Download de lokale taalversies van de instructiehandleiding vanaf www.alfalaval.com/fhe-manuals of gebruik de QR-code.

Norsk

Last ned denne instruksjonshåndboken på lokalt språk fra www.alfalaval.com/fhe-manuals eller bruk QR-koden.

Polski

Pobierz lokalne wersje językowe tej instrukcji obsługi z www.alfalaval.com/fhe-manuals lub użyj kodu QR.

Português

Descarregue as versões locais na sua língua deste manual de instruções a partir de www.alfalaval.com/fhe-manuals ou use o código QR.

Românesc

Versiunile în limba locală ale acestui manual de instrucţiuni pot fi descărcate de pe www.alfalaval.com/fhe-manuals sau puteţi utiliza codul QR.

Русский

Руководство пользователя на другом языке вы можете загрузить по ссылке www.alfalaval.com/fhe-manuals или отсканировав QR-код.

Slovenský

Miestne jazykové verzie tohto návodu na používanie si stiahnite z www.alfalaval.com/fhe-manuals alebo použite QR kód.

Slovenski

Prenesite različice uporabniškega priročnika v svojem jeziku s spletne strani www.alfalaval.com/fhe-manuals ali uporabite kodo QR.

Svenska

Ladda ned lokala språkversioner av denna bruksanvisning från www.alfalaval.com/fhe-manuals eller använd QR-koden.

中国

从 www.alfalaval.com/fhe-manuals 或使用 QR 码下载此使用说明书的本地语言版本。

www.alfalaval.com/fhe-manuals

Table of contents

EN

Description 7
Function 7
Name plates 7

Installation 8
Unpacking 8
Lifting 8
Requirements 9
Mounting 11
Installation in general 12
Installation as evaporator or condenser 13
Leak test 14

Operation 15
Start-up 15
Unit in operation 16
Shut-down 17

Maintenance 18
General guidelines regarding maintenance 18
Cleaning-In-Place 19

Fault tracing 20
Pressure drop problems 20
Heat transfer problems 20

How to contact Alfa Laval
Contact details for all countries are
continually updated on our website.
Please visit www.alfalaval.com to access the information directly.

© Alfa Laval Corporate AB
This document and its contents is owned by Alfa Laval Corporate AB and protected by laws governing intellectual property and thereto related rights. It is the responsibility of the user of this document to comply with all applicable intellectual property laws. Without limiting any rights related to this document, no part of this document may be copied, reproduced or transmitted in any form or by any means (electronic, mechanical, photocopying, recording, or otherwise), or for any purpose, without the expressed permission of Alfa Laval Corporate AB. Alfa Laval Corporate AB will enforce its rights related to this document to the fullest extent of the law, including the seeking of criminal prosecution.

Preface

This manual provides information needed to install, operate and carry out the maintenance of the plate heat exchanger.

Intended use

The plate heat exchanger has been designed to meet the requirement for a wide range of heat transfer applications such as refrigeration, comfort heating, industrial heating and cooling, and the process industry.

Safety considerations

The plate heat exchanger must be used and maintained in accordance with the instructions in this manual. Faulty handling of the plate heat exchanger may result in serious with injuries and/or property damage. Alfa Laval will not accept responsibility for any damage or injury caused as a result of not following the instructions in this manual.

The plate heat exchanger must be used in accordance with the specified configuration of material, media, temperatures and pressure for the specific plate heat exchangers.

Prior knowledge

The plate heat exchanger must be operated by individuals who have studied the instructions in this manual and have knowledge of the process. This includes knowledge of the precautions regarding media, pressures, the temperatures in the plate heat exchanger as well as specific precautions required for the process.

Maintenance and installation of the plate heat exchanger must be performed by individuals who have knowledge and authorization according to the local regulations. This includes performance work such as piping, welding and maintenance.

For maintenance work not described in this manual, please contact an Alfa Laval Representative for advice.

Definitions of expressions

Warning!
Type of hazard
WARNING indicates a potentially hazardous situation that, if not avoided, may result in death or serious injury.

Caution!
Type of hazard
CAUTION indicates a potentially hazardous situation that, if not avoided, may result in minor or moderate injury.

Note!
NOTE indicates a potentially hazardous situation that, if not avoided, may result in property damage.

Warranty conditions

Unless altered by written agreement, Alfa Laval standard warranty applies.

Storage of the plate heat exchangers

Alfa Laval delivers the plate heat exchanger ready for operation, unless agreed otherwise. Keep the plate heat exchanger in the packing box until it is ready to be installed.

If there is any uncertainty with regard to the storage of the plate heat exchanger, please consult an Alfa Laval Representative.

For longer storage periods, keep the heat exchanger in a protective environment away from corrosive substances and dust which may affects its performance.

Keep the plastic plugs or caps for the connections in place during storage.

Environmental compliance

Alfa Laval endeavours to perform its own operations as cleanly and efficiently as possible. Environmental aspects are taken into consideration when developing, designing, manufacturing, servicing and marketing the company's products.

Fusion-bonded Plate Heat Exchangers (FHE) consist of channel plates (stainless steel), frame elements (stainless steel) and connections (stainless or carbon steel) bonded together. Bolts (stainless or carbon steel with different surface treatments) are usually welded on the product. Additionally, feet and lifting lugs can be mounted on demand.

Unpacking
Packing material consists of wood, plastics, cardboard boxes and, in some cases, metal straps.

Packing materials can be reused, recycled or used for energy recovery, according to local legislations.

Disposal
Heat exchangers must be recycled according to relevant, local regulations. Any hazardous residues from the process liquid must be considered and dealt with in a properly. When in doubt, or in absence of local regulations, please contact the local Alfa Laval representative.

Restricted substances
All plate heat exchangers are in compliance with REACH (Registration, Evaluation, Authorization and Restriction of Chemicals) and RoHS Directive.

EN

Description

Function

Plate heat exchangers consist of a pack of corrugated metal plates with ports for the passage of the two fluids between which the heat transfer will take place.

The media in the heat transfer are led into the plate pack through portholes at the corners and are distributed into the passages between the corrugated plates.

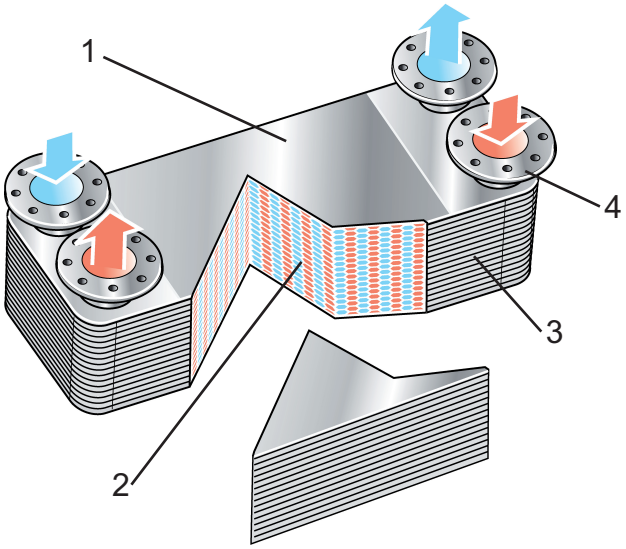

Figure 1. Function: Cover plate (1), corrugated plates (2), seal (3) and ports (4).

Warning!
The heat exchanger must not be opened.

Name plates

Warning!
The mechanical design pressures and temperatures are marked on the name plate. These must not be exceeded.

The unit type, manufacturing number and year along with the pressure vessel details in accordance with applicable pressure vessel code can be found on the name plate. The name plate is fixed to the cover plate (usually on the same side as the connections).

Name plate differs depending on the type of pressure vessel approval.

Installation

Unpacking

Carefully open the package containing the plate heat exchanger. Check that all items are included according to the specifications and that all parts are undamaged.

Before installing the plate heat exchanger, remove the plastic plugs or caps in the connections.

Lifting

Warning!
Never lift only by the connections or anyb of the studs. Use straps when lifting and place them according to the figure below.

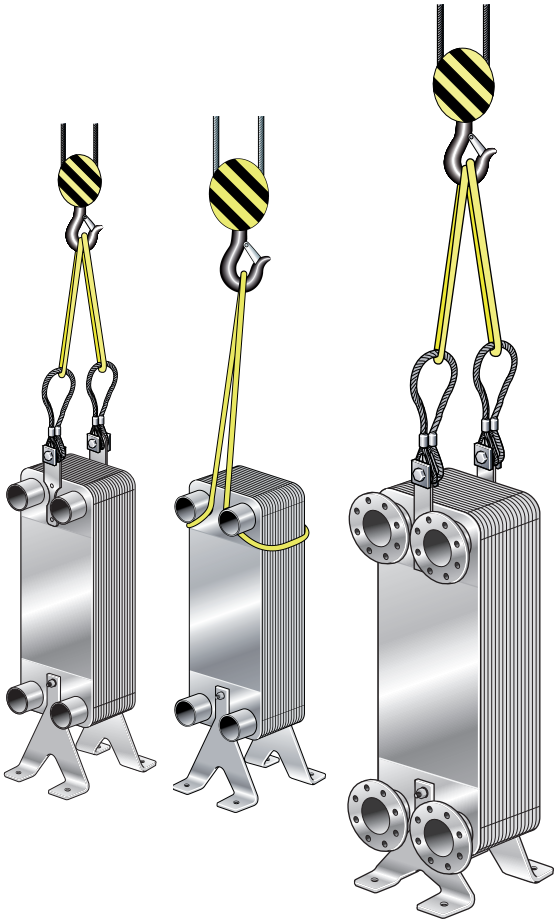

Figure 2. Examples of lifting.

Note!
When using lifting lugs, keep the angle of the straps as close as possible to 90° but never less than 60°.

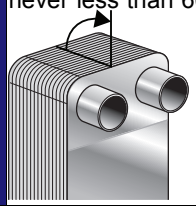

Warning!
Be careful and keep clear of the heat exchanger during lifting to avoid personal injuries.

EN

Warning!
Plate heat exchangers with large plate packs may be difficult to lift without lifting lugs because the center of gravity may cause the plate heat exchanger lean too much. If in doubt, use lifting lugs.

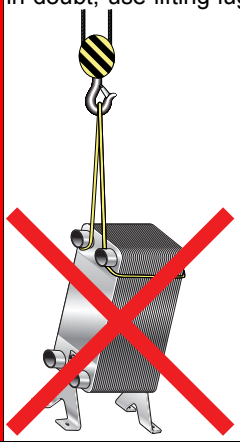

Requirements

Warning!
The plate heat exchanger must be installed and operated so that no risk of injury to personnel or damage to property.

Caution!
Protective gloves should always be worn when handling the plate heat exchanger to avoid hand injuries caused by sharp edges.

Note!
Unless otherwise specified, product data for normal refrigerants, i.e. HFC and HCFC, are applicable to refrigeration applications. The manufacturer must be consulted before the heat exchanger is used for flammable, toxic or dangerous liquids (e.g. hydrocarbons). Relevant safety rules must be followed for handling such liquids. For further information, please refer to the supplier's website.

Foundation
Install on a foundation that will give enough support to the unit.

Protection against loads on connections during operation
The piping must be well supported so that no loads are transferred to the heat exchanger during operation. Also refer to "Mounting" on page 11.

Connection loads at installation

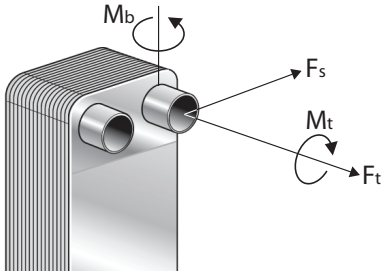

Figure 3. Connection loads.

With reference to definitions in figure, the loads during installation should not exceed the limits specified in table below.

Maximum recommended connection loads during installation

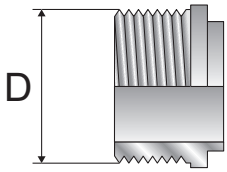

Figure 4. Outer diameter of the connection (D).

Outer diameter mm (inch)	Tension force **F_t kN (lbf)**	Bending moment **M_b Nm (lbf*ft)**	Shear force[1] **F_s kN (lbf)**	Torque **M_t Nm (lbf*ft)**
15 -28 (0.6 - 1.1”)	2.4 (539)	14 (10.3)	0.7 (157)	38 (28.0)
29 - 35 (1.1 - 1.4”)	4.0 (899)	45 (33.2)	1.2 (269)	120 (88.5)
36 - 45 (1.4 - 1.8”)	6.5 (1461)	110 (81.1)	2.5 (562)	240 (177.0)
46 - 55 (1.8 - 2.2”)	7.0 (1573)	120 (88.5)	4.8 (1079)	440 (324.5)
56 - 76 (2.2 - 3.0”)	12.0 (2697)	250 (184.4)	5.2 (1169)	600 (442.5)
77 - 99 (3.0 - 3.9”)	13.0 (2922)	310 (228.6)	5.8 (1303)	1200 (885.0)
100 - (3.9” -)	28.0 (6294)	800 (590)	5.8 (1303)	2500 (1843)

1. Shear force (Fs) is calculated assuming that the force is applied at the end of the longest standard connection.

EN

Mounting

It is recommended to mount the plate heat exchanger on the floor, on feet or on the wall.

Larger heat exchangers should be secured with support mountings (ordered as accessory) intended for a specific heat exchanger, or be secured with straps or by means of mounting bolts.

Note!
Regardless of the mounting method minimize the pipe loads at installation.

Maximum tightening torques for the mounting bolts according to table below.

Bolt dimension	Torque	
	Nm	lbf*ft
M5	2.3	1.7
M6	3.8	2.8
M8	9.5	7.0
M10	19.0	14.0
M12	33.0	24.3
UNC 1/4”	3.8	2.8
UNC 5/16”	8.6	6.4
UNC 3/8”	15.6	11.5

In a rigid pipe system, small heat exchangers can be suspended directly in the pipework. To avoid vibrations, use anti-vibration mounting according to picture below.

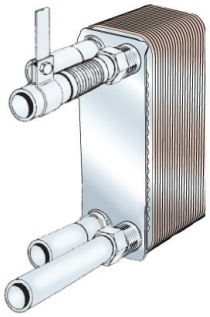

Installation in general

Warning!
Safety valves must be installed according to pressure vessel regulations.

Note!
Before connecting any piping, make sure all foreign objects have been flushed out of the system.

The installation must be installed with equipment that protects it against pressures and temperatures outside the approved minimum and maximum values shown on the name plate.

For vibration risks, install anti-vibration mountings as shown in picture for rigid pipe system in section Mounting at page 11.

Normally the plate heat exchanger is connected so that the media flows through the plate heat exchanger in opposite directions (in counter-current flow) and in most cases this provides the best heat transfer performance.

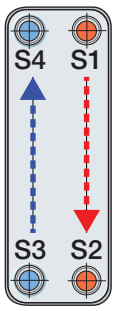

Take into account the risk of fire during installation, i.e. bear in mind the distance from flammable substances.

EN

Connections
Threaded connections – Use a torque wrench when connecting the pipe and observe the specified limits. Refer to table on page 10.

Brazed connections – Clean by rubbing down and degreasing the various surfaces. Use the correct brazing temperature and brazing metal grade.

Welded connections – To minimize the heat impact of the heat exchanger it is recommended to use TIG or MIG welding methods. Preparation for welding: Grind inside and outside of the pipe and, if bevelled, also the bevelled edge at least 25 mm from the pipe edge and inward.

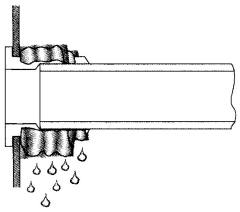

Note!
Before connecting the heat exchanger to the system consider valve set-up and access points for example to be prepared to perform cleaning.

Note!
Protect the heat exchanger from overheating by wrapping a piece of wet cloth around the connection while soldering or welding.

Installation as evaporator or condenser

In applications where a phase change of media occurs, the heat exchanger must be installed vertically.

For refrigeration applications – Figure A shows the installation of an evaporator, which the connections may be either on the front or on the rear. Figure B shows a condenser.

- Use an anti-freeze thermostat and flow monitor to ensure a constant water flow before, during, and at least two minutes after the compressor has been running.
- Avoid “pump-down”, i.e. emptying the evaporator by running the compressor after shut-down until a preset refrigerant pressure is reached. The temperature could then drop below the brine freezing point, which could damage the evaporator.
- Use a flow switch and a low-pressure switch.
- Make sure only media from the heat exchanger can pass the flow switch. The low-pressure switch should assure a minimum pressure drop of 5 - 10 kPa (0.73 - 1.45 PSI).

Heat exchanger with a refrigerant distribution system should be mounted with the distributor at the bottom.

Typical installation of single circuit:

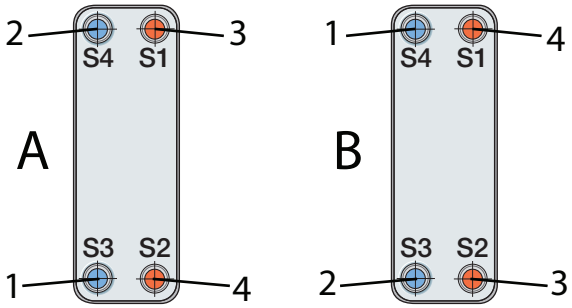

Figure 5. Single circuit: A evaporator; B condensor.
1.Refrigerant inlet 2.Refrigerant outlet
3.Water/Brine inlet 4.Water/Brine outlet

For an evaporator, the pipe should be straight (at least 150 mm / 5.9 inch length) between the expansion valve and refrigerant inlet. Avoid using pipe elbows between the expansion valve and the refrigerant inlet.

Leak test

Perform leakage test before placing the plate heat exchanger in operation.

EN

Operation

Start-up

Note!
If several pumps are included in the system, make sure you know which one should be activated first.

Note!
Adjustments of flow rates should be made slowly in order to avoid the risk of **water hammer**.
Water hammer is a short-lasting pressure peak that can appear during start-up or shut-down of a system, which causing liquids to travel along a pipe as a wave at the speed of sound. This can cause considerable damage to the equipment.

Step 1
Check that the inlet valve (2) is closed between the pump and the unit controlling the system flow rate.
Inlet valve (2, 3) for both fluids should be closed, the outlet valves (1, 4) opened and the vent valve (5, 6) closed.

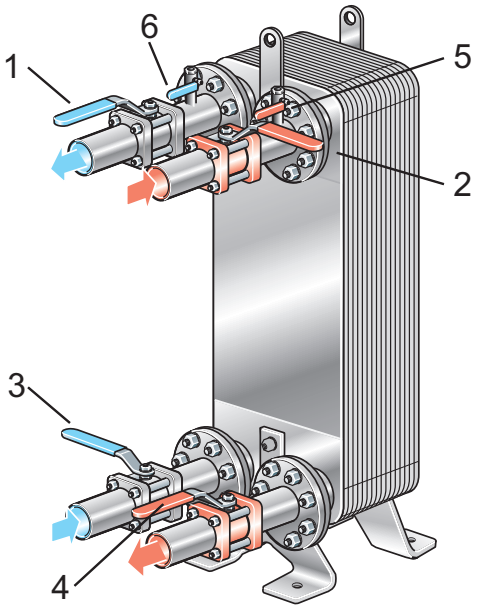

Step 2
If there is a outlet valve (4), make sure that it is fully open.

Step 3
Open the vent valve (5) and start the pump.

Step 4
Open the inlet valve (2) slowly.

Step 5
When all air is expelled, close the vent valve (5).

Step 6
Repeat steps 1–5 for the second media.

Unit in operation

Note!
Adjustments of flow rates should be made slowly in order to protect the system against sudden and extreme variations of temperature and pressure.

During operation, check that:

- media temperatures and pressures are within the limits stated on the name plate
- no leakages appear due to faulty tightening of the connections.

Protection against connection loads
Make sure that the heat exchanger is fastened to avoid or minimize connection loads during operation.

Protection against freezing
Bear in mind the risk of freezing at low temperatures. Plate heat exchangers that are not in operation should be emptied and blown dry whenever there is a risk of freezing.

Note!
To avoid damage due to freezing, the medium used must include an anti-freeze agent when operating conditions are below 5 °C (41 °F) and/or when the evaporating temperature is below 1 °C (34 °F).

Protection against clogging
Use a filter as protection against the possible occurrence of foreign particles. If you have any doubt concerning the maximum particle size, please consult your Alfa Laval Representative.

Protection against thermal or/and pressure fatigue
Sudden temperature and pressure changes could cause fatigue damage to the heat exchanger. Therefore, the following must be taken into consideration to ensure that the heat exchanger operates without fluctuating pressures/temperatures.

Warning!
The plate heat exchanger is not intended for cyclic processes, please contact an Alfa Laval Representative for advice.

- Locate the temperature sensor as close as possible to the outlet from the heat exchanger.
- Choose valves and regulation equipment which give stable temperatures/pressures for the heat exchanger.
- To avoid water hammer, quick-closing valves must not be used, e.g. on/off valves.
- In automated installations, stopping and starting of the pumps and actuation of valves must be programmed so that the amplitude and frequency of the pressure variation are as low as possible.

Recommended limits for Chloride ions, Cl^- at pH 7.5 [1] [2]	
	Alloy 316
at 25 °C / 77 °F	1000 ppm
at 65 °C / 149 °F	200 ppm
at 80 °C / 176 °F	100 ppm

1. Lower levels of chloride ions may cause corrosion due to other factors.
2. Halogens, e.g. bromides and flourides may also cause corrosion.

All components in contact with media are manufactured in stainless steel to prevent corrosion. Do not expose the heat exchanger to media that will cause corrosion to stainless steel parts.

EN

Insulation
If the heat exchanger will be operated at very hot or very cold temperature, take protective actions, such as insulation, to avoid injuries. Be certain to follow all local regulations.

Heating and cooling insulations are available as accessories.

Be aware that temperature limits of insulation and the heat exchanger can be different.

Shut-down

> ***Note!***
> If several pumps are included in the system, make sure you know which one should be stopped first.

1. Slowly reduce the flow rate in order to avoid water hammer.
2. When the valve is closed, stop the pump.
3. Repeat steps 1–2 for the other medium/media.
4. If the plate heat exchanger is shut down for a long period, it should be drained.
   Also, drain the heat exchanger if the process is shut down and the ambient temperature is below the freezing temperature of the media.
   Depending on the media processed, rinse and dry the heat exchanger and its connections.

Maintenance

Cleaning can improve the performance of the plate heat exchanger. Cleaning intervals depends on factors such as media and temperatures.

General guidelines regarding maintenance

Plate Sheet material
Stainless steel can corrode. Chloride ions are hazardous.

Avoid cooling brines containing chloride salts as NaCl and, most harmful, $CaCl_2$.

Chlorine as a growth inhibitor

	Note! Chlorine, commonly used as a growth inhibitor in cooling water systems, reduces the corrosion resistance of stainless steels. Chlorine weakens the passive layer of these steels making them more susceptible to corrosion. This is dependent on exposure time and concentration of chlorine.

In every case where the chlorination of the plate heat exchanger cannot be avoided, consult an Alfa Laval Representative for advice.

EN

Cleaning-In-Place

Cleaning-In-Place (CIP) equipment permits cleaning of the plate heat exchanger.

CIP performs:

- By regular CIP, the dissolution of fouling helps to restore the original thermal performance of the unit.
- The passivating effect by the CIP procedure can help to maintain the original corrosion resistance of the plate material.

Type of cleaning:

- Acidic cleaning removes inorganic deposits such as limestone.
- Neutralization of cleaning liquids before draining and flushing the unit with potable water.

Follow the instructions of the CIP equipment.

Consult an Alfa Laval Representative for approriate advice on selecting CIP equipment.

Warning!
Use proper protective equipment, such as safety boots, safety gloves and eye protection, when using cleaning agents.

Warning!
Corrosive cleaning liquids can cause serious injuries to skin and eyes!

For detailed information regarding Cleaning liquids and procedure, refer to the CIP manual.

Rinse well with fresh water after cleaning.

Caution!
Make sure that the handling of residuals after using cleaning liquids follows the local environmental regulations.

Fault tracing

Pressure drop problems

If the pressure drop has increased.

Action	
1.Check that all valves are open including non-return valves. - Measure the pressure and the flow rate directly in front of the inlet and after the outlet of the heat exchanger.For viscous media use a membrane manometer with a diameter of at least 30 mm. - Measure or estimate the flow rate if possible. A bucket and a watch showing seconds may be sufficient for small flow rates. For larger flow rates, use a flowmeter.	
Correction	
YES	-
NO	-

Action	
2.Compare the pressure drop observed with the specified flow rate (see data printout). Is the pressure drop higher than specified?	
Correction	
YES	Check the temperature program, see step 3
NO	If the pressure drop corresponds to the specifications, there is no need for action. If the pressure drop is lower than specified, the pump capacity is probably too small or the observation may be wrong. See pump instruction manual.

Action	
3.Check the thermometer readings. Do the readings correspond to those specified?	
Correction	
YES	The heat transfer surface is probably clean enough, but the inlet to the heat exchanger may be clogged by some objects. Check the port area.
NO	Heat transfer is obviously dropping below specifications, because of deposits on the heat transfer surface, which at the same time also increases the pressure drop, since the passage becomes narrower. If a Cleaning-In-Place (CIP) system is available, follow the instructions and use it to wash out the deposits.

Heat transfer problems

The heat transfer capacity is dropping.

Action	
1.Measure temperatures at inlets and outlets. Also measure flow rates on both media, if possible. On at least one of the media, both temperatures and the flow rate must be measured. Check to see if the transferred amount of heat energy corresponds to the specifications. If great precision is important, it will be necessary to use laboratory thermometers with an accuracy of 0.1 °C, and also to use the best equipment available for flow measurement. Has the heat transfer capacity of the unit dropped below specified values?	
Correction	
YES	Clean the heat transfer surface. Use the Cleaning-In-Place (CIP) system.
NO	-