Alfa Laval AlfaNova 76 / HP 76

Fusion-bonded plate heat exchanger in 100% stainless steel

Introduction

Alfa Laval AlfaNova fusion-bonded plate heat exchangers are made of 100% stainless steel. They are suitable for applications which place high demand on cleanliness, applications where aggressive media like ammonia are used or where copper and nickel contamination is unaccepted.

AlfaNova provides efficient heat transfer with a small footprint, has an extreme pressure fatigue resistance and covers high temperatures, up to 550°C/1022°F.

Applications

Suitable for a wide range of applications, such as:

- HVAC heating and cooling
- Refrigeration
- Oil cooling
- Industrial heating and cooling
- Process heating and cooling

Benefits

- Compact
- Easy to install
- Self-cleaning
- Low level of service and maintenance is required
- All units are pressure and leak tested
- Gasket free
- Copper free

Design

The AlfaFusion filler material seals and holds the plates together at the contact points ensuring optimal heat transfer efficiency and pressure resistance. Using advanced design technologies and extensive verification guarantees the highest performance and longest possible service life.

Different pressure ratings are available for different needs.

Based on standard components and a modular concept, each unit is custom-built to meet the specific requirements of each individual installation.

Examples of connections

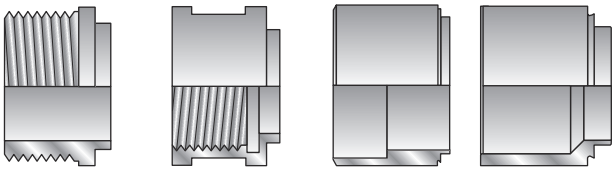

External thread | Internal thread | Soldering | Welding

Technical Data

Standard materials	
Cover plates	Stainless steel
Connections	Stainless steel
Plates	Stainless steel
AlfaFusion filler	Stainless steel

Dimensions and weight [1]	
A measure (mm)	11 + (2.85 * n)
A measure (inches)	0.43 + (0.11 * n)
Weight (kg)[2]	8 + (0.49 * n)
Weight (lb)[2]	17.64 + (1.08 * n)

[1] n = number of plates

[2] Excluding connections

Standard data	
Volume per channel, litres (gal)	(A) S1-S2: 0.25 (0.0660) (A) S3-S4: 0.18 (0.0476) (H, L): 0.25 (0.0660) (E): 0.18 (0.0476)
Max. particle size, mm (inch)	1.2 (0.047)
Max. flowrate[1] m^3/h (gpm)	37 (162.9)
Flow directions	Parallel
Min. number of plates	10
Max. number of plates	150

[1] Water at 5 m/s (16.4 ft/s) (connection velocity)

Dimensional Drawing

Measurements in mm (inches)

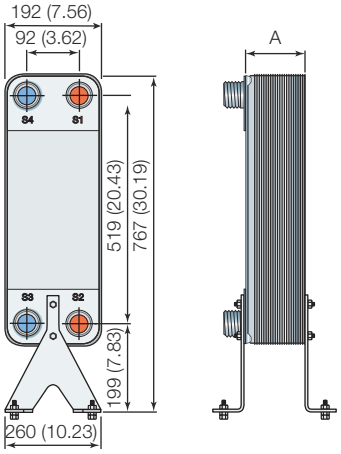

Design pressure and temperature

AlfaNova 76 – PED approval pressure/temperature graph [1]

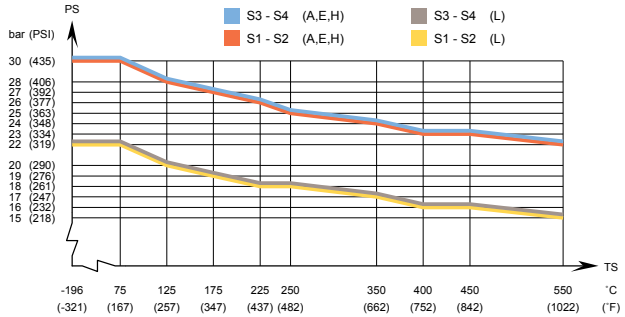

[1] Min. temperature -10°C (14°F) with connection tube made of carbon steel.

AlfaNova HP 76 – PED approval pressure/temperature graph [1]

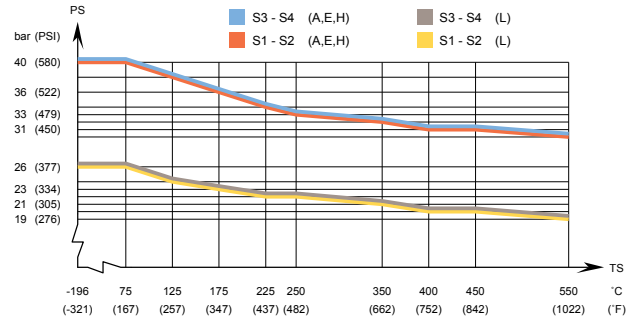

[1] Min. temperature -10°C (14°F) with connection tube made of carbon steel.

AlfaNova HP 76 – UL approval pressure/temperature graph

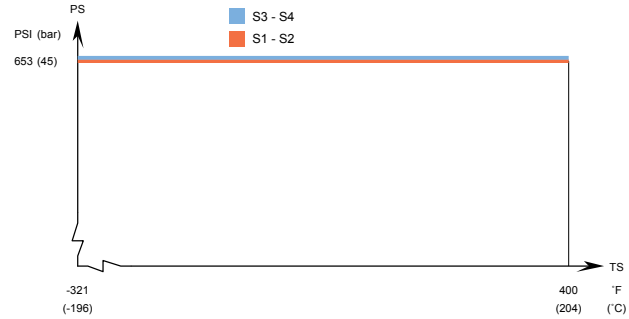

Designed for full vacuum.

Alfa Laval plate heat exchangers are available with a wide range of pressure vessel approvals. Please contact your Alfa Laval representative for more information.

NOTE: Values above are to be used as an indication. For exact values, please use the drawing generated by the Alfa Laval configurator or contact your local Alfa Laval representative.

Marine approvals

AlfaNovaM HP 76 can be delivered with marine classification certificate (ABS, BV, CCS, ClassNK, DNV, GL, LR, RINA, RMRS)

This document and its contents are subject to copyrights and other intellectual property rights owned by Alfa Laval Corporate AB. No part of this document may be copied, re-produced or transmitted in any form or by any means, or for any purpose, without Alfa Laval Corporate AB's prior express written permission. Information and services provided in this document are made as a benefit and service to the user, and no representations or warranties are made about the accuracy or suitability of this information and these services for any purpose. All rights are reserved.

CHE00048-2-EN-GB

© Alfa Laval Corporate AB

How to contact Alfa Laval

Up-to-date Alfa Laval contact details for all countries are always available on our website at www.alfalaval.com