1.3 Control / Check valves

The non-return valve LKC-2 is designed for use in hygienic installations to prevent reverse product flow.

Product leaflets

LKC-2/LKC-H Non-return Valve 1.3.132
LKC UltraPure Non-return Valve 1.3.134
LKUV-2 Air-Relief Valve 1.3.136
LKSV Float Valve 1.3.138
SB Self-cleaning CO2-valve 1.3.140

Price lists

LKC-2 / LKC-H 1.3.142
LKC-2 - Options 1.3.143
LKC UltraPure 1.3.144
LKBV, LKSV, LKUV-2 . . . . . 1.3.146
SB Self Cleaning CO2 Valve 1.3.147

Alfa Laval LKC-2/LKC-H Non-return Valve

The Safe Choice

Concept
Non-return valve LKC-2 is designed for use in stainless steel pipe installations to prevent reverse flow.

Working principle
LKC-2 opens when the pressure below the valve plug exceeds the pressure above the plug and the spring force.
The valve closes when pressure equalization has been achieved. A higher counter pressure will press the valve plug against the seat.

Standard Design
The valve body is in two parts, assembled by means of a clamp ring and hygienically sealed with a special seal ring. A guide disc and four legs guide the spring loaded valve plug with an O-ring seal.

The valve is available with welding ends for tubes according to ISO and DIN 11850.

TECHNICAL DATA

Temperature
Max. temperature: . . . . . 140°C (EPDM)
Min. temperature: . . . . . -10°C

Pressure
Max. product pressure: . . . . . 1000 kPa (10 bar)

Mechanical
Required differential pressure for opening the valve when fitted in a vertical pipe, as shown in fig. 3, is approx. 6 kPa (0.06 bar)

Options
Product wetted seal rings of Nitrile (NBR) or Fluorinated rubber (FPM).

PHYSICAL DATA

Materials
Product wetted steel parts: . . . . . 1.4301 (304) / 1.4404 (316L)
External surface finish . . . . . Bright (Machined Ra 1.6)
Internal surface finish . . . . . Bright (polished), Ra < 0.8 µm
Product wetted seals: . . . . . EPDM rubber

Pressure drop/capacity diagram

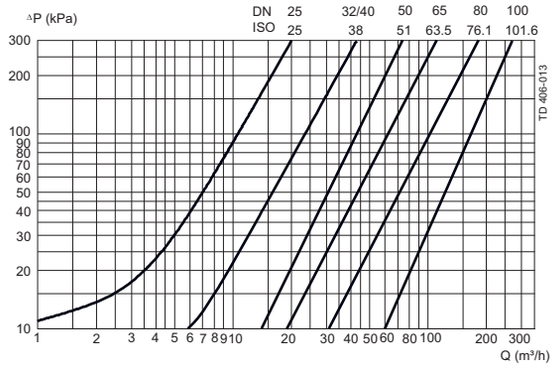

Fig. 1. **Note!**
For the diagram the following applies:
Medium: Water (20°C).
Measurement: In accordance with VDI 2173.

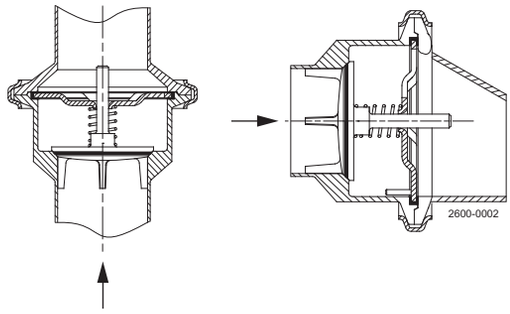

Fig. 2 = Flow direction.
Shows the optimal built-in situation. Other positions possible are e.g. horizontal. The four guide legs of the valve cone ensure good alignment.
90° rotation.

Dimensions (mm)

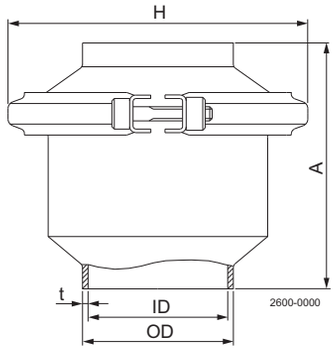

Vertical mounted

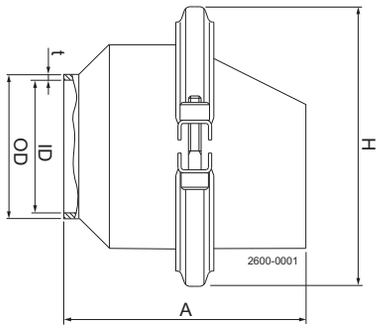

Horizontal mounted

Table 1. Dimensions - Vertical mounted

	ISO						DIN						
Size	**25**	**38**	**51**	**63.5**	**76.1**	**101.6**	**DN**	**DN**	**DN**	**DN**	**DN**	**DN**	**DN**
	mm	**mm**	**mm**	**mm**	**mm**	**mm**	**25**	**32**	**40**	**50**	**65**	**80**	**100**
A	62.5	75.0	87.5	95.0	115	155	62.5	75.0	75.0	87.5	95.0	115	155
OD	25.4	38.4	51.4	63.9	76.4	102	30.0	36.0	42.0	54.0	70.0	85.0	104
ID	22.5	35.5	48.5	60.5	72.0	97.6	26.0	32.0	38.0	50.0	66.0	81.0	100
t	1.45	1.45	1.45	1.7	2.2	2.2	2	2	2	2	2	2	2
H	72.0	85.5	99	127	138	164	72.0	85.5	85.5	99	127	138	164
Weight (kg)	0.5	0.7	1.0	1.7	2.4	4.3	0.5	0.7	0.7	1.0	1.7	2.4	4.3

Table 2. Dimensions - Horizontal mounted

	ISO				
Size	**25**	**38**	**51**	**63.5**	**76.1**
	mm	**mm**	**mm**	**mm**	**mm**
A	95.5	86.4	104.1	119.4	139.7
OD	25.4	38.4	51.4	63.9	76.4
ID	22.5	35.5	48.5	60.5	72.0
t	1.45	1.45	1.45	1.7	2.2
H	72.0	85.5	99.0	127.0	138.0
Weight (kg)	0.5	0.7	1.0	1.7	2.4

Alfa Laval LKC UltraPure Non-return Valve

The Safe Choice For High Purity Applications

Concept
LKC is a non-return valve preventing reverse flow in a system. The UltraPure execution is designed and documented to meet the demand in industries like BioPharm and Personal Care.

Working principle
The spring acts on the valve plug and keeps the valve closed until the force from the pressure in the inlet exceeds the force of the spring. If a reverse flow should occur the spring force and the pressure from the outlet will keep the valve closed.

Standard Design
The valve body is made in two parts that are assembled with a clamp ring. A guide disc and four legs guide the spring loaded valve plug in the valve body.

TECHNICAL DATA

Max. product pressure: . . . . . 1000 kPa (10 bar)
Required differential pressure for opening the valve when fitted in a vertical pipe, as shown in fig. 2, is approx. 6 kPa (0.06 bar).

Surface specification (Product wetted steel parts)
Alfa Laval designation: 7
Internal: . . . . . Ra < 0.8 µm
ASME BPE designation: SF3
External: . . . . . Ra < 0.8 µm

Alfa Laval designation: PL
Internal: . . . . . Ra < 0.5 µm
ASME BPE designation: SF1
External: . . . . . Ra < 0.8 µm

PHYSICAL DATA

Product wetted steel part	1.4404 (316L)
	Acc. to EN 10088 or equal (AISI 316L)
Other steel parts	1.4301 (304)
	Acc. to AISI 304
Spring	Electropolished

Elastomers

Product wetted elastomer	EPDM
	Acc. to FDA and USP Class VI
	Temperature: -10°C - 140°C
Product wetted elastomer	FPM
	Acc. to FDA
	Temperature: -10°C - 180°C

Connections

Weld ends	Matching tubes and fittings: ISO 2037 / Series A/DIN
	Acc. to ISO or DIN
Clamp ends	Matching tubes and fittings: ISO 2037 / Series A/DIN
	Acc. to ISO or DIN

Pressure drop/capacity diagram

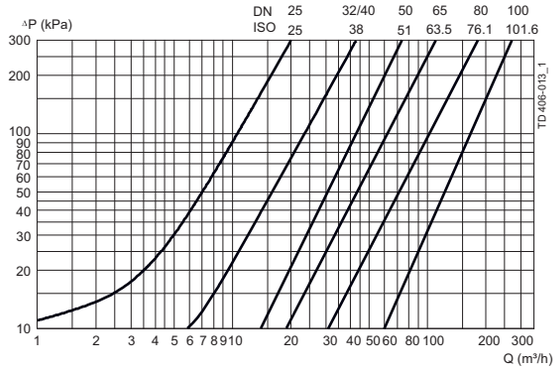

Fig.1. **Note!**
For the diagram the following applies:
Medium: Water (20°C).
Measurement: In accordance with VDI 2173.

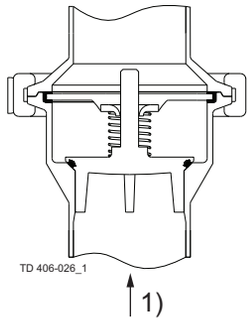

Fig.2.
1 = Flow direction.
Shows the optimal built-in situation to make sure the valve is drainable. The four guide legs of the valve cone ensure good alignment.
90° rotation.

Dimensions (mm)

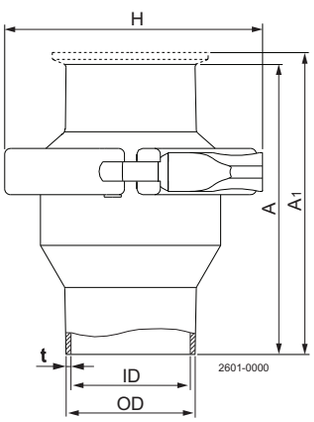

Table 1. Dimensions.

	ISO						DIN						
Size	**25**	**38**	**51**	**63.5**	**76.1**	**101.6**	**25**	**32**	**40**	**50**	**65**	**80**	**100**
A	62.5	75.0	87.5	95.0	115.0	155.0	62.5	75.0	75.0	87.5	95.0	115.0	155.0
A_1	105.5	118.0	130.5	138.0	158.0	198.0	105.5	118.0	118.0	130.5	151.0	171.0	211.0
OD	25.4	38.4	51.4	63.9	76.4	102.0	30.0	36.0	42.0	54.0	70.0	85.0	104.0
ID	22.5	35.5	48.5	60.5	72.0	97.6	26.0	32.0	38.0	50.0	66.0	81.0	100.0
t	1.45	1.45	1.45	1.7	2.2	2.2	2.0	2.0	2.0	2.0	2.0	2.0	2.0
H	77.4	90.4	103.6	132.6	144.0	164.0	77.4	90.4	90.4	103.6	132.6	144.0	164.0
Weight (kg):													
Welding ends	0.7	1.0	1.3	2.1	2.9	4.3	0.7	1.0	1.0	1.3	2.1	2.9	4.3
Clamp ends	0.9	1.1	1.4	2.5	3.4	4.7	0.9	1.1	1.1	1.4	2.5	3.4	4.7

TD 900-563

1.3

Alfa Laval LKUV-2 Air-Relief Valve

Control the Air in your System

Concept

LKUV-2 is a reliable, automatic air-relief valve which is installed vertically on the top of a pipeline or container or before the inlet for a pump, where the removal of air is required. Example 1: Bleeding of a pipe line where an air pocket has formed on account of the installation. In this case the valve is installed at the top of the pipe. Example 2: Bleeding of a pipe on the suction side of a pump. The suction side is bled automatically, before the pump starts, establishing a vacuum. Binding of air to the product will be prevented, and hence subsequent cavitation. In this case the valve is installed in front of the pump, on top of the inlet pipe.

Working principle

LKUV-2 is a double-seated valve with a freely moving plastic ball. The ball, which is lighter than water, closes against the upper or lower seat, depending on the pressure conditions.

Standard design

The valve body is in two parts and assembled by means of a clamp. The lower valve body has a welding stub.

TECHNICAL DATA

Pressure

Max. product pressure: . . . . . 1000 kPa (10 bar)
Max. temperature: . . . . . 90°C (because of the plastic ball)
Density of ball: . . . . . 0.906 kg/dm^3

PHYSICAL DATA

Materials

Product wetted steel parts: . . . 1.4301 (304)
Ball: Material . . . . . Polypropylene
Product wetted seals: . . . . . EPDM
Surface finish: . . . . . Bright

Options

Alternative elastomers:
- NBR (Buna N)
- FPM (SFY)

Note! Important for correct function:
- Product density higher than the ball density.
- Vertical installation.
- Pure products.

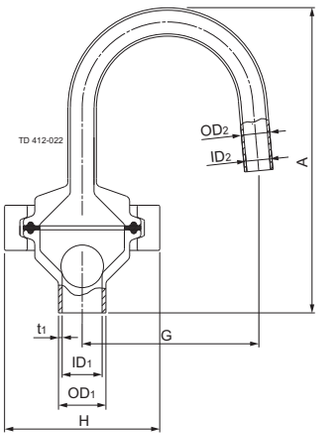

Fig. 1. Dimensions

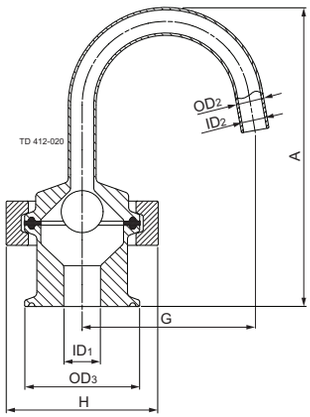

Fig. 2. Dimensions

Dimensions

Dimension	(mm)	(inch)
A	128.7	5.07
G	74.5	2.93
H	58.5	2.57
ID1	15.8	0.66
ID2	10	0.39
OD1	20	0.79
OD2	12	0.47
OD3	49.5	1.95
	64.0	2.52
t1	1.6	0.06
Weight	(kg)	(lb)
	0.6	1.32

Situation 1

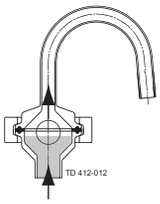

Pressure conditions
Pressure, air or product, or air/product.

Effect
The ball is lifted from the lower seat. The air can escape until the product lifts the ball against the upper seat, closing the valve.

Situation 2

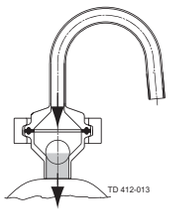

Pressure conditions
Vacuum, air or product, or air/ product.

Effect
The ball moves against the lower seat, closing the valve, whether it contains air or product, or air/product.

Alfa Laval LKSV Float Valve

Maintain the Right Liquid Level

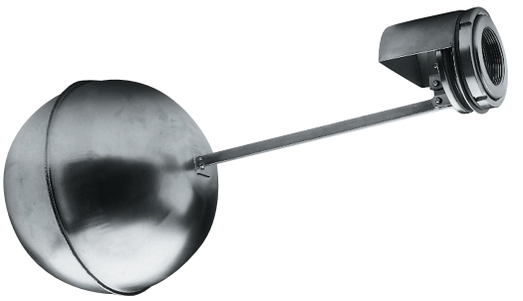

Concept

Float valve LKSV is designed for maintaining a constant liquid level in a tank or container.
LKSV is, however, not suitable if the liquid has a tendency to foam, and the pressure drop is relatively high.

Working principle

Float valve LKSV is installed on the tank wall and the tank inlet tube is fixed to the valve. The seat opening is determined by the position of the float on the liquid. The movement of the float is transferred by mechanical connection to the valve which allows liquid flow into the tank to compensate for outward flow, thus maintaining a constant level in the tank.

Standard Design

LKSV has a valve body and float of stainless steel. The valve body is made for fitting into the side wall of a tank, and it is supplied with a rubber seal for the product side and a fibre ring which goes between the tank wall and the retaining nut. The valve body has an internal pipe thread for connecting the inlet pipe. The valve cone is fitted with an O-ring which seals against the valve seat.

TECHNICAL DATA

Temperature

Max. temperature: . . . . . 95°C (EPDM)
Min. temperature: . . . . . 10°C

Pressure

Max. product pressure: . . . . . 400 kPa (4 bar)

PHYSICAL DATA

Materials

Product wetted steel parts: 1.4301 (304)
Product wetted seal: . . . . . NBR
Surface finish: . . . . . Semi bright

Pressure drop/capacity diagram

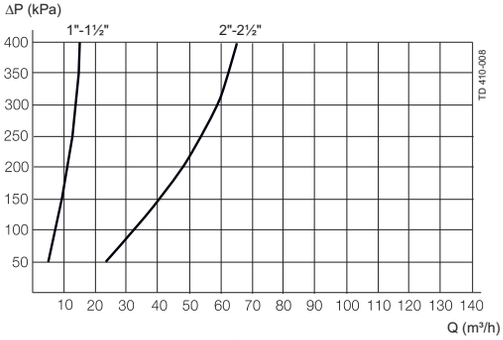

Note! Capacities are for float valve in fully open position.

Option:

Equipment

Screen to minimize splashing during tank filling.

Dimensions: (mm)

1-1½”

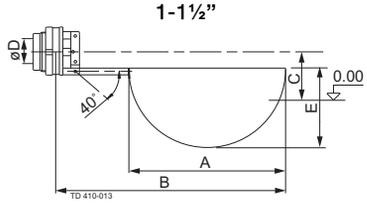

2-2½”

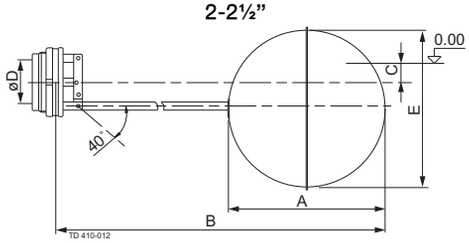

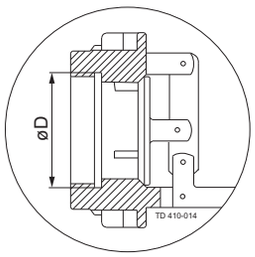

Size	1”	1½”	2”	2½”
A	240	240	260	260
B	350	350	550	550
C	70	70	20	20
E	130	130	240	240
F				
Weight (kg)	1.8	1.9	2.8	3.0

Connection D Internal thread R (BSP)	Internal valve diameter (mm)	Installation hole in tank wall (mm)	Max. wall thickness (excl. splashscreen) (mm)	Length of float arm (mm)
R 1" (BSP)	22.5	61	6	350
R 1½" (BSP)		61	6	
R 2" (BSP)	48.5	89	7	550
R 2½" (BSP)		89	7	

1.3

Alfa Laval SB Self-cleaning CO2-valve

For Gas Management

Concept
Combined gas escape/supply valve to be used in tank top systems and other applications for easy gas flow, allowing venting as well as pressurizing of vessel through the valve. Partly-closed for CIP liquid to be cleanable and self-draining.

Working Principle
The internal polypropylene valve body is force opened by a stainless steel spring, thus allowing full gas capacity through the valve in both directions. By introducing CIP flow against the spring force, the internal valve body will be moved to a closed position.

The CIP liquid will close the valve but a special drilling of the valve body ensures cleaning of all valve parts. Depending on valve size, this CIP flow is approx. 800-900 l/h.

Standard Design
The valve housing consists of two parts held together by a threaded connection. Inside there is a valve body and a spring to keep the body in open position. The valve body is drilled to ensure internal cleaning of the valve during CIP.

The valve is typically positioned as an integrated part of the gas/CIP-pipe at the top plate. It can be mounted at an angle of maximum 45° to the ideal vertical position.

TECHNICAL DATA

Maximum gas flow (both directions) at max. 0.1 bar ΔP

Size	Flow (m^3/h)
1”/DN25	25
1½”/DN40	50
2”/DN50	150
2½”/DN65	250
3”/DN80	450
4”/DN100	600

PHYSICAL DATA

Materials

Steel parts:	EN 1.4404 (AISI 316L) with 3.1 cert.
Product wetted seals:	EPDM
Product wetted polymers:	Polypropelen

Connections

Weld end acc. DIN 11850
Weld end acc. ISO 2037
Unions DIN 11851
Hygienic - Unions DIN 11853
Clamps ferrule ISO 2852

Open for gas in/out

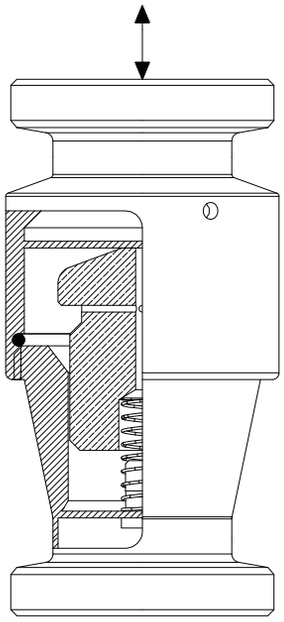
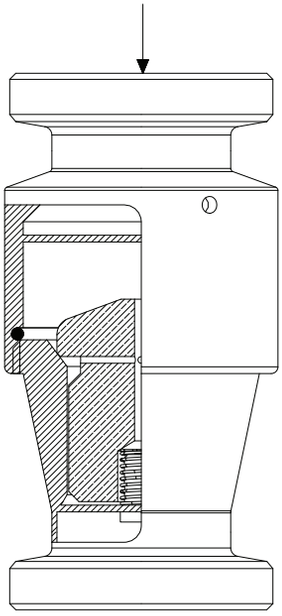
Partly closed during CIP flow